QUANTUM MICROWAVE

www.QuantumMicrowave.com

Cryogenic Superconducting Bias Tee

P/N: QMC-CRYODPLX-0218NM

This Bias Tee design is for cryogenic and room temperature operation.

- Broadband design
- Stackable
- Superconducting bias inductor
- OFHC Housing (non-magnetic)

Parameter	Specification	Notes
Frequency	DC to 500 MHz 2 to 18 GHz	DC Path RF Path
Insertion Loss	0.5 dB	
Return Loss	-15 dB	
Connectors	Non Magnetic RF+DC SMA(M) RF SMA(F) DC SMA(F)	
Max Voltage	50 VDC	
Max Current	225 mA	

Measured Data (Typical)

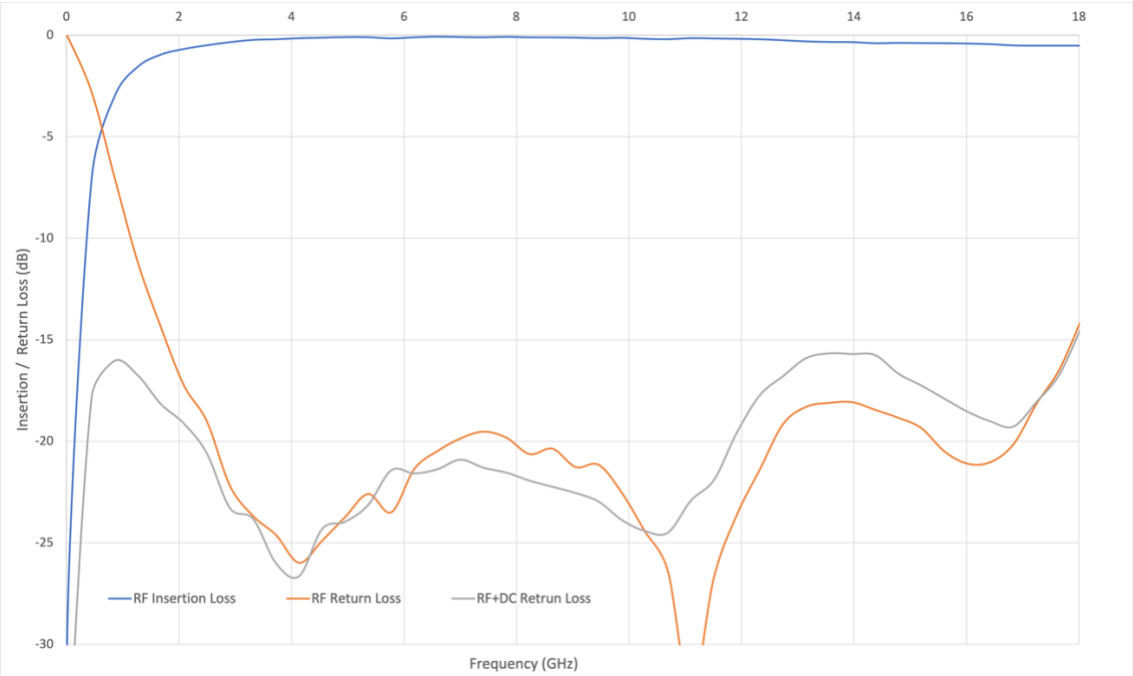

Block Diagram

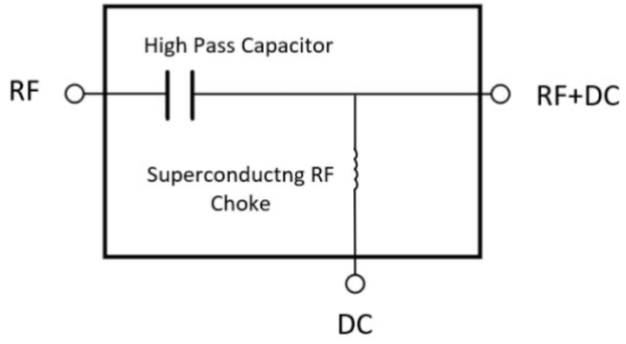
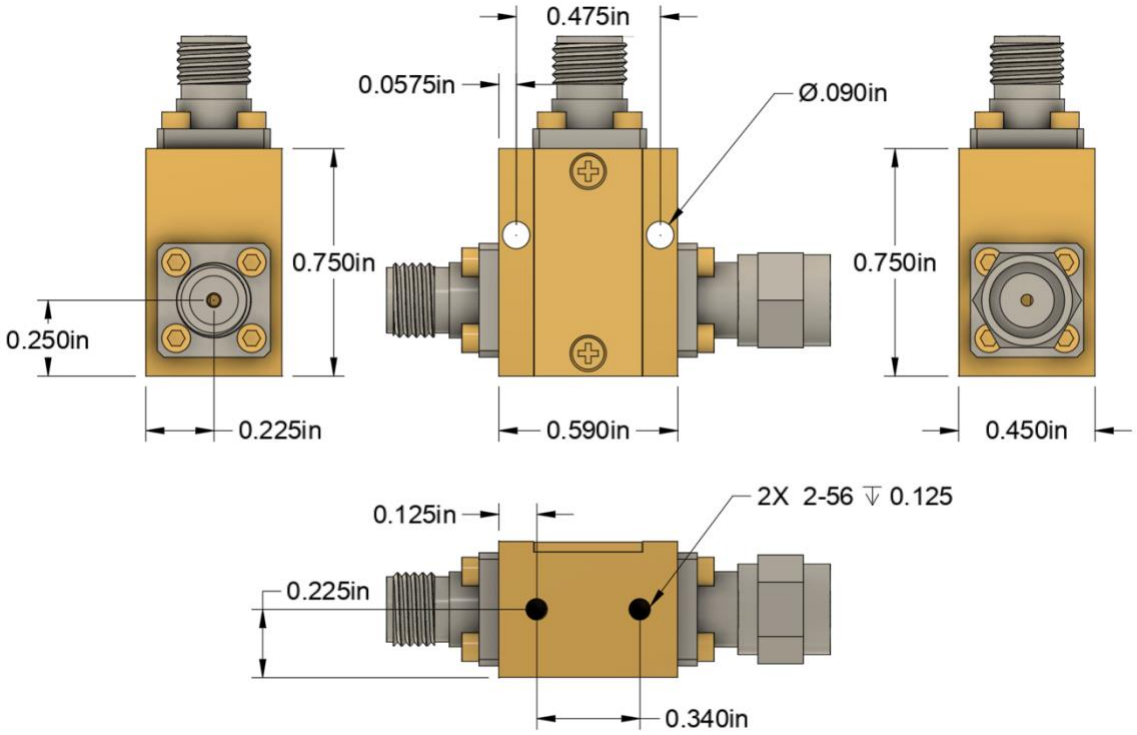
Outline Drawing