QMC-WB15-E90
QuantumMicrowave.com

Specifications:

- WR-15 V-Band Waveguide Bend
- Frequency: 50 to 75 GHz
- Length: 1 inch
- E-Plane
- 90 Degree Bend
- WR-15, UG385/U
- Material: Copper waveguide, Brass Flanges, Gold Plated

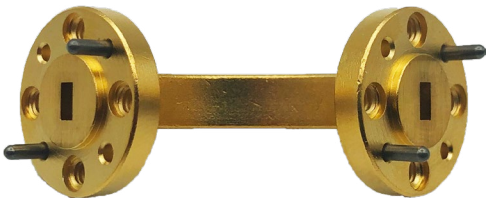

These waveguides are designed to have low loss and high performance
They are designed for low cost to save our customers money

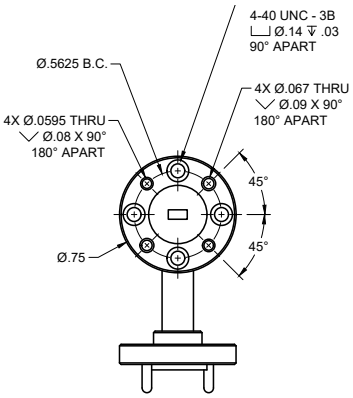

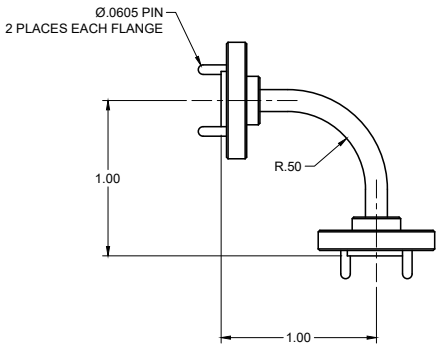

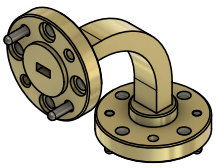

Made in the USA
Sales@QuantumMicrowave.com